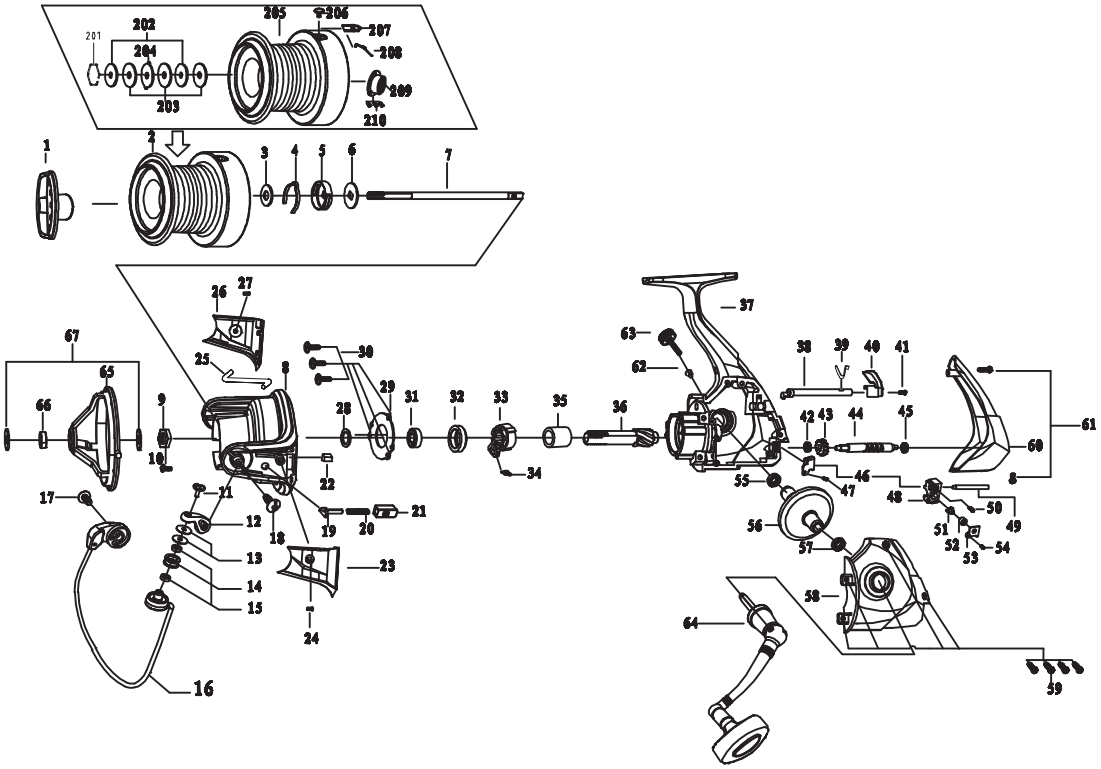

1 drag knob assembly
2 spool assembly
3 spool clicker gear fixed washer
4 click ring
5 click ring seat
6 click ring seat key washer
7 main shaft
8 rotor
9 rotor nut
10 hex fixed screw
11 line roller fixed screw
12 bail arm
13 line roller bushing
14 line roller
15 line roller collar
16 bail wire assembly
17 bail holder fixed screw
18 bail arm fixed screw
19 bail trip shaft
20 trip shaft spring
21 Bail Trip bar
22 Balance Weight
23 bail arm side cover
24 bail arm side cover screw
25 kick lever
26 bail holder side cover
27 bail holder side cover screw
28 rotor washer
29 one way clutch fixed plate
30 one way clutch fixed plate screw
31 pinion gear ball bearing
32 one way clutch bushing
33 one way clutch
34 clicker spring
35 one way clutch inner ring
36 pinion gear
37 body
38 anti-reverse cam
39 anti-reverse spring
40 anti-reverse switch
41 anti-reverse switch screw
42 worm shaft ball bearing
43 idle gear
44 worm shaft
45 worm shaft ball bearing
46 worm shaft ball bearing fixed washer
47 worm shaft ball bearing fixed washer screw
48 oscillating slider
49 slider fixed pin
50 oscillating slider screw
51 connect pawl
52 connect pawl bushing
53 connect pawl bushing fixed washer
54 connect pawl bushing fixed washer screw
55 body ball bearing
56 drive gear
57 body cover ball bearing
58 body cover
59 body cover screw
60 end decorated cover
61 end decorated cover screw
62 hexangular washer
63 handle screw
64 handle assembly
65 spool stop ring
66 spool stop ring bushing
67 click ring seat key washer

spool assembly
201 hex clip
202 drag key washer
203 drag washer
204 drag eared washer
205 spool
206 line clip
207 line clip washer
208 line clip fixed spring
209 spool clicker seat
210 spool clicker seat screw